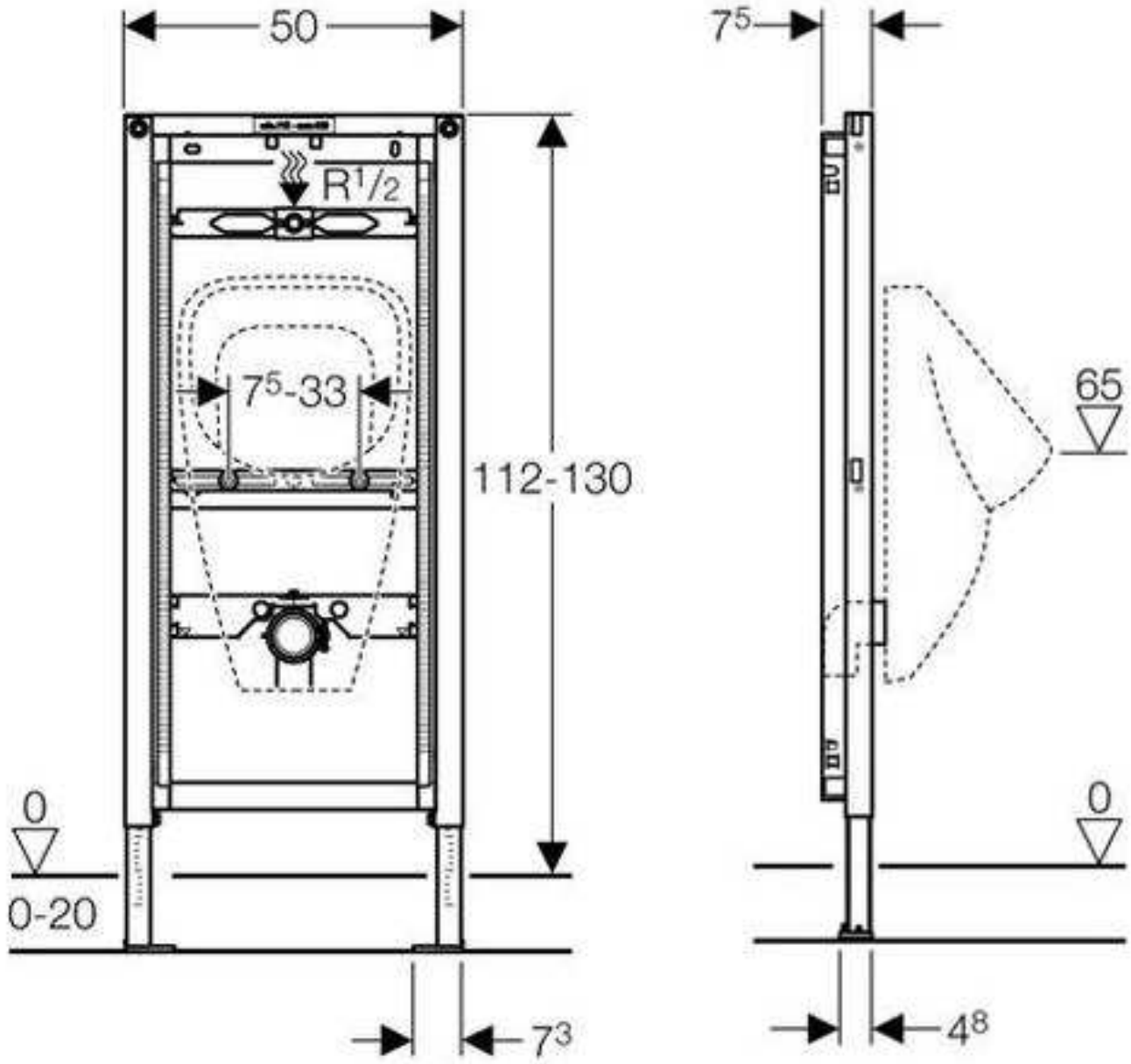
50
R1/2
75-33
112-130
0
0-20
73
75
65
0
48